Robin Generator

# Model RGX3000

# PARTS CATALOG

**Spec. No. RGM30023000**

**(Engine Spec.No.EX170D20630)**


| | |
|---|---|
| ISSUE EMD-GP6794 | |
| ISSUE DATE | 2009.07 |


FUJI HEAVY INDUSTRIES LTD.

# CONTENTS


| FIG. | |
|---|---|
| 100 | CRANKCASE |
| 200 | CRANKSHAFT PISTON |
| 300 | INTAKE EXHAUST |
| 330 | AIR CLEANER |
| 400 | GOVERNOR OPERATION |
| 500 | COOLING STARTING |
| 600 | FUEL LUBRICANT |
| 700 | ELECTRIC DEVICE |
| 2130 | ENGINE AY |
| 2200 | GENERATOR |
| 2300 | BASE FRAME |
| 2400 | CONTROL |
| 2600 | FUEL TANK |
| 2900 | ACCESSORIES |

# FIG. 100

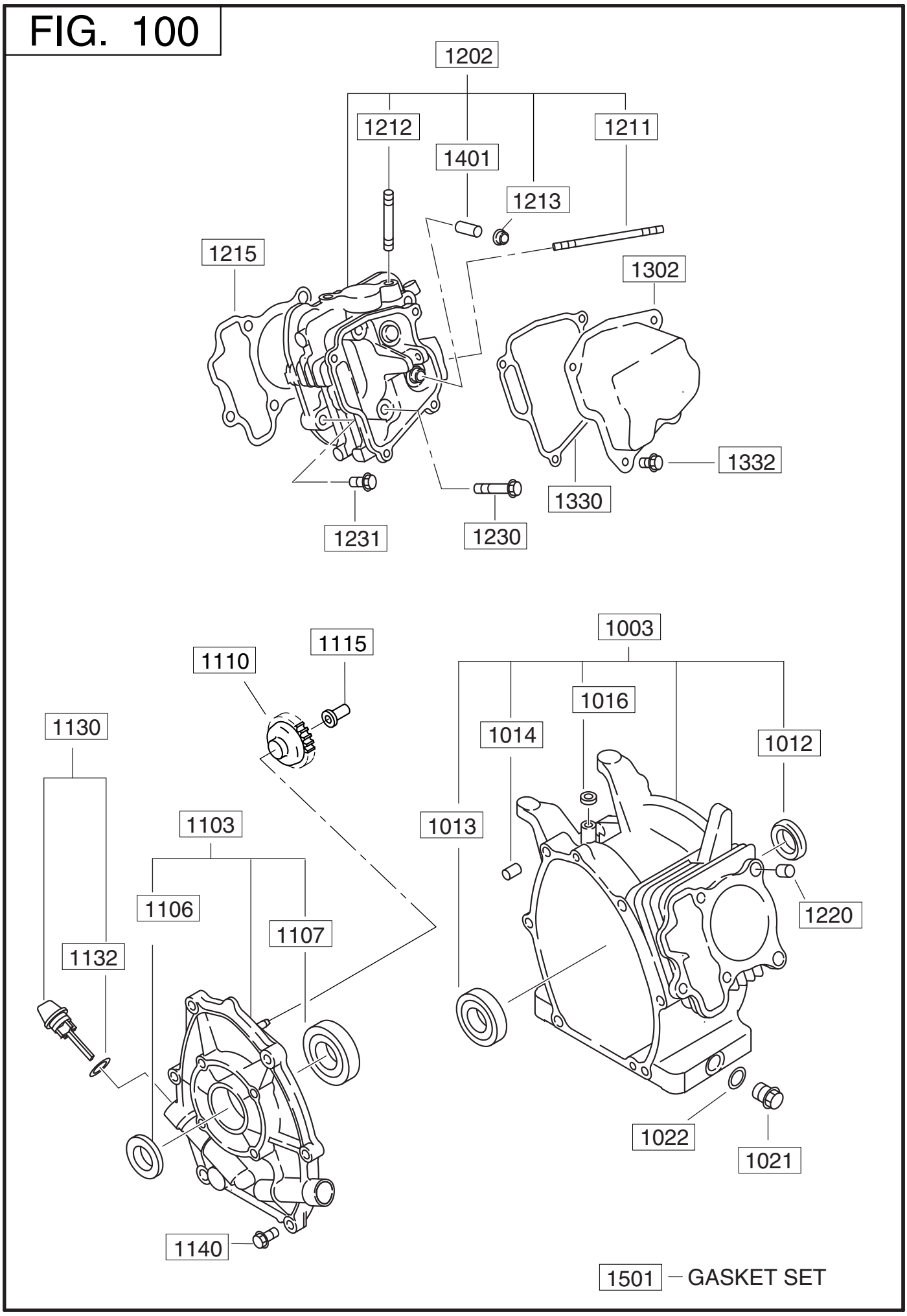


EX170D20630

# 1 CRANK CASE

| REF. | PART NUMBER | PART NAME | QTY | R E M A R K S | CODE NO. | INTERCHANGE P/NO. | UNIT P | FIG. |
|---|---|---|---|---|---|---|---|---|
| 1003 | 277-10102-51 | CRANK CASE CP | 1 | OIL SENSOR | | | | 100 |
| 1012 | 044-02502-00 | OIL SEAL | 1 | 25DX38DX7B | | | | 100 |
| 1013 | 060-02800-21 | BALL BEARING | 1 | 28DX58DX16B | | | | 100 |
| 1014 | 277-15011-03 | PIPE KNOCK | 2 | MBC | | | | 100 |
| 1016 | 044-00600-20 | OIL SEAL | 1 | 6DX10DX2.5B | | | | 100 |
| 1021 | 040-11400-30 | PLUG | 1 | 14D X 12L OIL DRAIN | | | | 100 |
| 1022 | 021-11400-20 | GASKET | 1 | T=0.4 OIL DRAIN | | | | 100 |
| 1103 | 277-11001-31 | MAIN BEARING COVER C | 1 | STD | | | | 100 |
| 1106 | 044-02502-10 | OIL SEAL | 1 | 24.5X41.25X6 | | | | 100 |
| 1107 | X60-02501-40 | BALL BEARING | 1 | 25DX52DX15B | | | | 100 |
| 1110 | 277-45004-J1 | GOVERNOR GEAR CP | 1 | | | | | 100 |
| 1115 | 277-41901-03 | GOVERNOR SLEEVE | 1 | | | | | 100 |
| 1130 | 277-63601-30 | OIL GAUGE AY | 2 | | | | | 100 |
| 1132 | 277-63601-08 | GASKET | 2 | | | | | 100 |
| 1140 | 001-04083-50 | FLANGE BOLT | 6 | | | | | 100 |
| 1202 | 277-13002-11 | CYLINDER HEAD CP | 1 | GEN | | | | 100 |
| 1211 | 010-50603-51 | STUD | 2 | 6DX98LX20S INTAKE | | | | 100 |
| 1212 | 010-50802-90 | STUD | 2 | EXHAUST | | | | 100 |
| 1213 | 277-16010-01 | STEM SEAL | 1 | IN-VALVE | | | | 100 |
| 1215 | 277-15001-33 | GASKET (HEAD) | 1 | | | | | 100 |
| 1220 | 277-15011-03 | PIPE KNOCK | 2 | | | | | 100 |
| 1230 | 011-00802-40 | FLANGE BOLT | 4 | M8X1.25X68L | | | | 100 |
| 1231 | 011-00803-10 | FLANGE BOLT | 1 | M8X1.25X33L HEAD | | | | 100 |
| 1302 | 277-15503-01 | ROCKER COVER CP | 1 | | | | | 100 |
| 1330 | 277-16001-13 | GASKET(ROCKER COVER) | 1 | T=0.5 | | | | 100 |
| 1332 | 011-00600-20 | FLANGE BOLT | 4 | M6X1.0X12L | | | | 100 |
| 1401 | 237-14202-03 | VALVE GUIDE | 2 | O.S. | | | | 100 |
| 1501 | 277-99001-47 | GASKET SET | 1 | | | | | 100 |

# FIG. 200

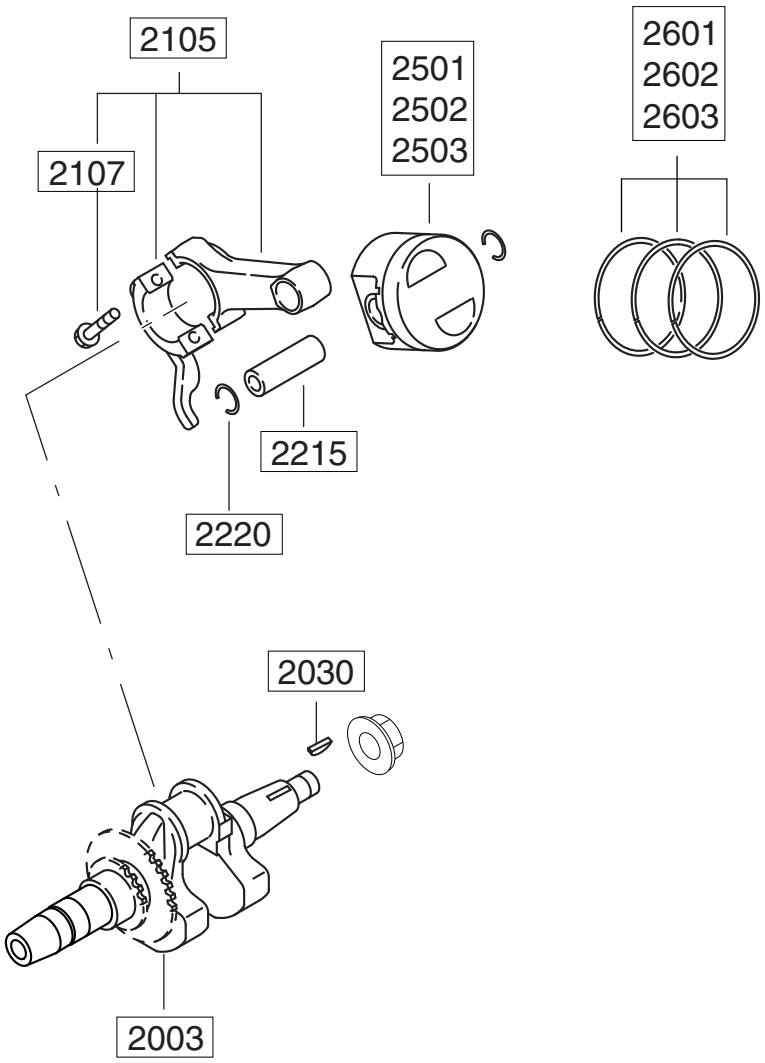


EX170D20630

## 2 CRANKSHAFT,PISTON

| REF. | PART NUMBER | PART NAME | QTY | R E M A R K S | CODE NO. | INTERCHANGE P/NO. | UNIT P | FIG. |
|---|---|---|---|---|---|---|---|---|
| 2003 | 277-20701-21 | CRANK SHAFT CP | 1 | GEN-STD | | | | 200 |
| 2030 | 032-30300-10 | WOODRUFF KEY | 1 | 3X6(D16) | | | | 200 |
| 2105 | 278-22501-10 | CONNECTING ROD AY | 1 | STD | | | | 200 |
| 2107 | 277-23001-03 | CONNECTING ROD BOLT | 2 | M6 | | | | 200 |
| 2215 | 277-23301-13 | PISTON PIN | 1 | | | | | 200 |
| 2220 | 056-51600-10 | CLIP | 2 | 15.7D1X1.4D2 | | | | 200 |
| 2501 | 277-23401-J3 | PISTON | 1 | STD | | | | 200 |
| 2502 | 277-23403-J3 | PISTON | 1 | 0.25 O.S. | | | | 200 |
| 2503 | 277-23404-J3 | PISTON | 1 | 0.50 O.S. | | | | 200 |
| 2601 | 277-23531-07 | PISTON RING SET | 1 | STD T3 | | | | 200 |
| 2602 | 277-23532-07 | PISTON RING SET | 1 | 0.25 O.S. | | | | 200 |
| 2603 | 277-23533-07 | PISTON RING SET | 1 | 0.50 O.S. | | | | 200 |

# FIG. 300

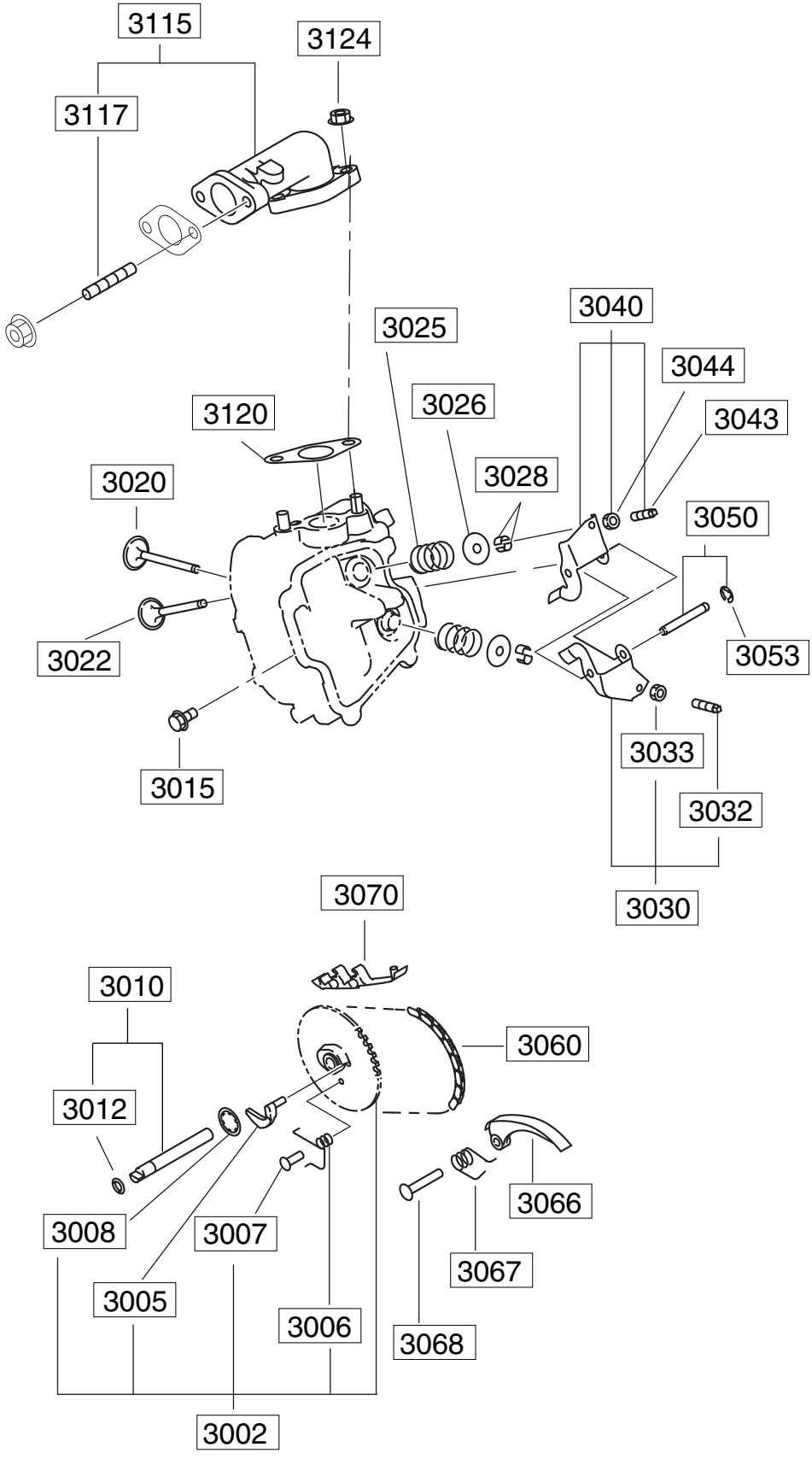
3115
3124
3117
3040
3025
3044
3026
3120
3043
3028
3020
3050
3022
3053
3033
3015
3032
3030
3070
3010
3060
3012
3066
3008
3007
3067
3005
3006
3068
3002

# 3 INTAKE EXHAUST

| REF. | PART NUMBER | PART NAME | QTY | R E M A R K S | CODE NO. | INTERCHANGE P/NO. | UNIT P | FIG. |
|---|---|---|---|---|---|---|---|---|
| 3002 | 278-31601-31 | CAM SHAFT CP | 1 | GEN | | | | 300 |
| 3005 | 277-36401-03 | RELEASE LEVER | 1 | | | | | 300 |
| 3006 | 279-38701-13 | RETURN SPRING | 1 | GEN,D=0.6 DECOMP | | | | 300 |
| 3007 | 277-38601-03 | PIN(SPRING) | 1 | RETURN SP | | | | 300 |
| 3008 | 277-36501-03 | CLIP | 1 | | | | | 300 |
| 3010 | 277-35101-01 | PIN(CAM SHAFT)CP | 1 | | | | | 300 |
| 3012 | 024-00600-10 | O RING | 1 | D1.9X5.8 | | | | 300 |
| 3015 | 011-00600-10 | FLANGE BOLT | 1 | M6X1.0,L=8 | | | | 300 |
| 3020 | 277-33401-H3 | INTAKE VALVE | 1 | | | | | 300 |
| 3022 | 277-33501-H3 | EXHAUST VALVE | 1 | | | | | 300 |
| 3025 | 279-33601-03 | VALVE SPRING | 2 | | | | | 300 |
| 3026 | 269-33701-03 | SPRING RETAINER | 2 | | | | | 300 |
| 3028 | 132-10KA0-31 | COLLET-VALVE | 4 | VIVIO | | | | 300 |
| 3030 | 277-36201-00 | ROCKER ARM(IN) AY | 1 | | | | | 300 |
| 3032 | 014-90500-20 | ADJUST SCREW | 1 | M5X0.5T2 | | | | 300 |
| 3033 | 017-00500-30 | NUT | 1 | M5X0.5T2 | | | | 300 |
| 3040 | 277-36202-00 | ROCKER ARM(EX) AY | 1 | | | | | 300 |
| 3043 | 014-90500-20 | ADJUST SCREW | 1 | M5X0.5T2 | | | | 300 |
| 3044 | 017-00500-30 | NUT | 1 | M5X0.5T2 | | | | 300 |
| 3050 | 277-35004-01 | PIN(ROCKER) CP | 1 | | | | | 300 |
| 3053 | 003-13050-00 | CLIP | 1 | | | | | 300 |
| 3060 | 277-35601-11 | TIMING CHAIN CP | 1 | 88LINK | | | | 300 |
| 3066 | 277-36911-03 | TENTIONER | 1 | | | | | 300 |
| 3067 | 277-37101-03 | SPRING(TENTIONER) | 1 | | | | | 300 |
| 3068 | 277-36902-03 | PIN(TENTIONER) | 1 | | | | | 300 |
| 3070 | 277-36913-13 | CHAIN GUIDE | 1 | CHAIN | | | | 300 |
| 3115 | 277-34001-01 | EXHAUST PIPE CP | 1 | | | | | 300 |
| 3117 | 010-50802-90 | STUD | 2 | | | | | 300 |
| 3120 | 277-35201-13 | GASKET(MUFFLER) | 1 | T=0.2 | | | | 300 |
| 3124 | 980-20082-80 | FLANGE NUT | 2 | M8X1.25X6.5H MUFFLER | | | | 300 |

# FIG. 330

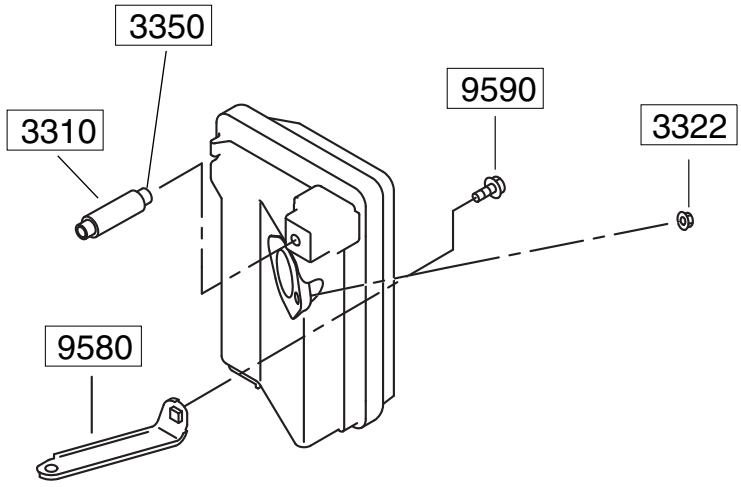


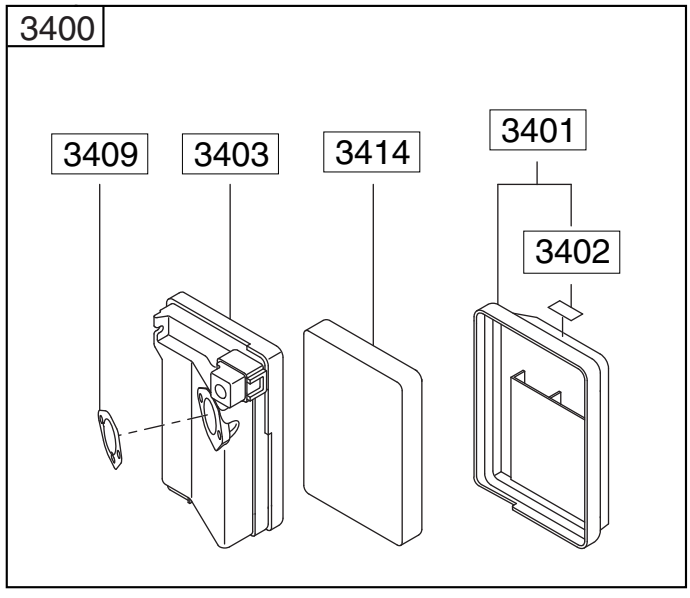

# 3 INTAKE EXHAUST

| REF. | PART NUMBER | PART NAME | QTY | R E M A R K S | CODE NO. | INTERCHANGE P/NO. | UNIT P | FIG. |
|---|---|---|---|---|---|---|---|---|
| 3310 | 277-69001-03 | SPONGE PROTECTOR | 1 | 12DX20DX65L | | | | 330 |
| 3322 | 002-38060-00 | FLANGE NUT | 2 | AC | | | | 330 |
| 3350 | 277-32762-08 | RUBBER PIPE | 1 | | | | | 330 |
| 3400 | 277-32622-20 | AIR CLEANER AY | 1 | NEW-GEN(URETHANE) | | | | 330 |
| 3401 | 277-32643-18 | COVER CP | 1 | | | | | 330 |
| 3402 | 073-20044-30 | LABEL(CHOKE) | 1 | | | | | 330 |
| 3403 | 277-32632-08 | BACE CP | 1 | | | | | 330 |
| 3409 | 277-32604-08 | PACKING | 1 | | | | | 330 |
| 3414 | 277-32661-17 | ELEMENT AY | 1 | | | | | 330 |
| 9580 | 277-39001-01 | BRACKET(AC) CP | 1 | | | | | 330 |
| 9590 | 011-00600-50 | FLANGE BOLT | 1 | M6XL20 | | | | 330 |

# FIG. 400

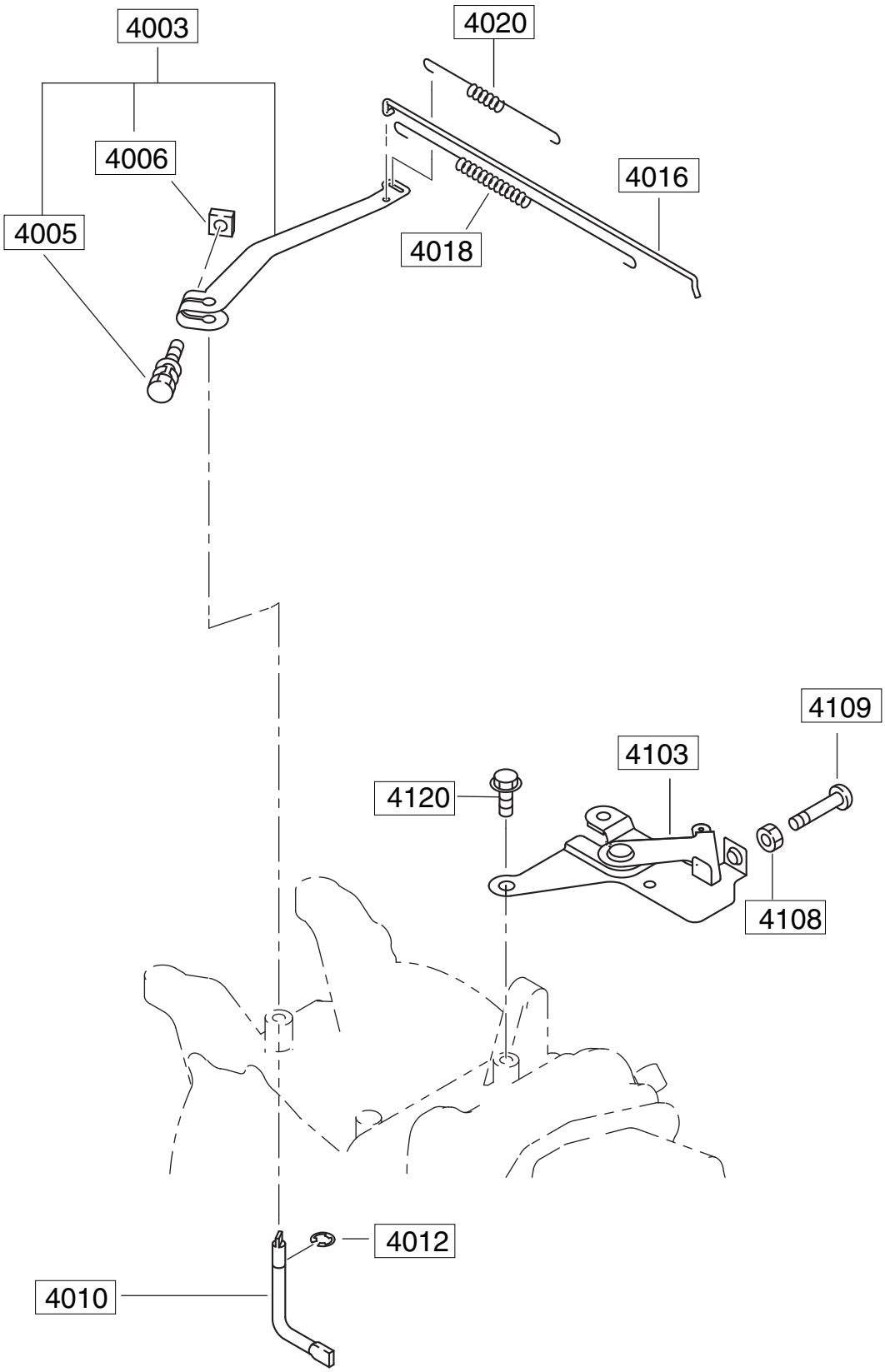


EX170D20630

# 4 GOVERNOR OPERATION

| REF. | PART NUMBER | PART NAME | QTY | R E M A R K S | CODE NO. | INTERCHANGE P/NO. | UNIT P | FIG. |
|---|---|---|---|---|---|---|---|---|
| 4003 | 277-42301-40 | GOVERNOR LEVER AY | 1 | | | | | 400 |
| 4005 | 013-00602-40 | BOLT AND WASHER AY | 1 | M6X25L | | | | 400 |
| 4006 | 018-60600-20 | NUT | 1 | M6 | | | | 400 |
| 4010 | 277-42201-33 | GOVERNOR SHAFT | 1 | 6D | | | | 400 |
| 4012 | 003-13050-00 | CLIP | 1 | GOV SHAFT | | | | 400 |
| 4016 | 277-42701-11 | GOVERNOR ROD CP | 1 | | | | | 400 |
| 4018 | 277-42801-23 | ROD SPRING | 1 | 0.5D | | | | 400 |
| 4020 | 279-42510-13 | GOVERNOR SPRING | 1 | 0.7D (60HZ) | | | | 400 |
| 4103 | 277-46501-11 | SPEED CONTROL CP | 1 | GEN | | | | 400 |
| 4108 | 002-17060-00 | NUT | 1 | | | | | 400 |
| 4109 | 004-31064-00 | SCREW | 1 | | | | | 400 |
| 4120 | 011-00600-20 | FLANGE BOLT | 2 | M6X1.0X12L | | | | 400 |

# FIG. 500

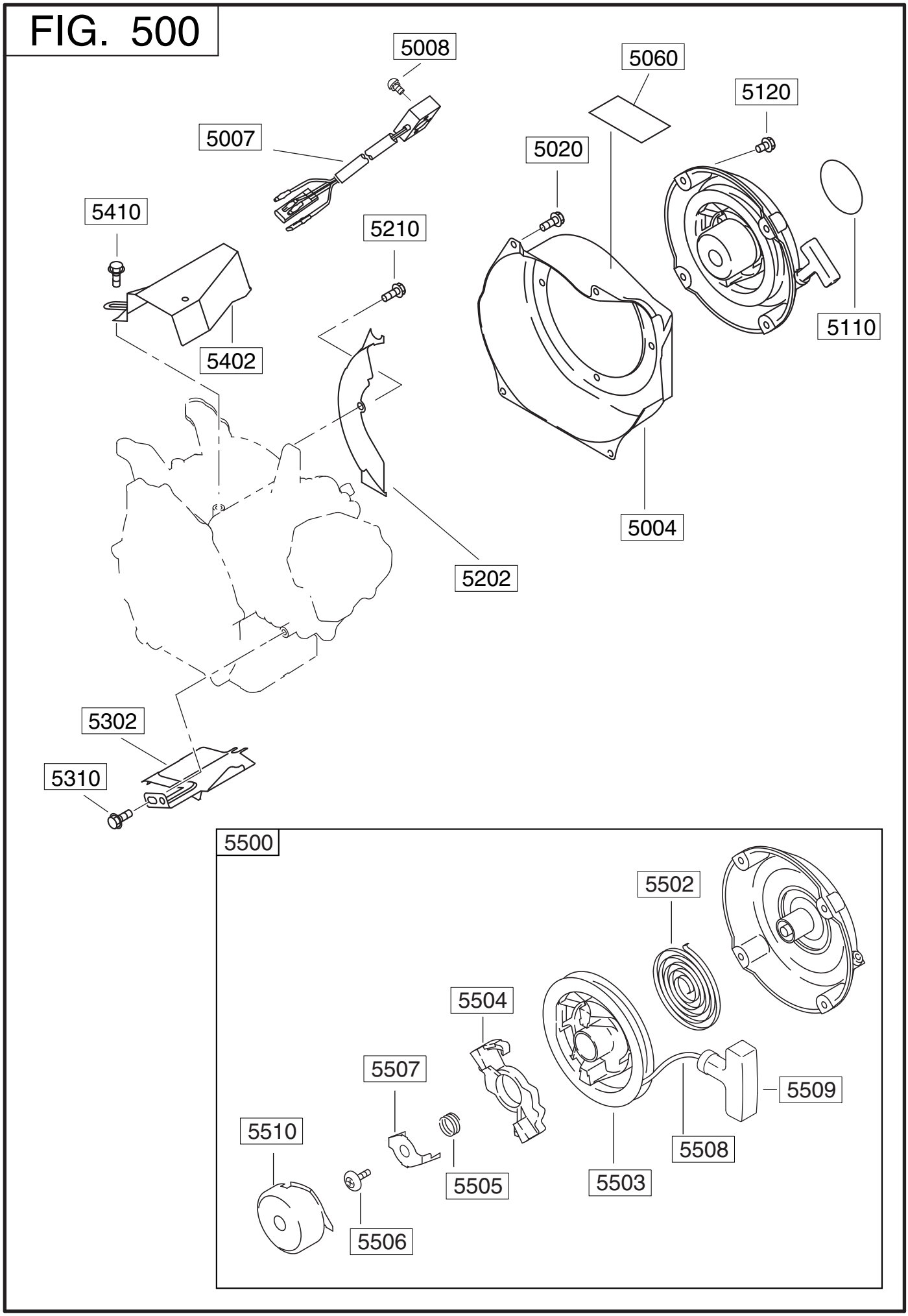


EX170D20630

## 5 COOLING STARTING

| REF. | PART NUMBER | PART NAME | QTY | R E M A R K S | CODE NO. | INTERCHANGE P/NO. | UNIT P | FIG. |
|---|---|---|---|---|---|---|---|---|
| 5004 | 277-51202-01 | BLOWER HOUSING CP | 1 | BLACK | | | | 500 |
| 5007 | KU3-11070-01 | FLOAT C/U CP4 | 1 | | | | | 500 |
| 5008 | 015-00400-90 | TAPPING SCREW | 2 | M4X10 | | | | 500 |
| 5020 | 011-00600-30 | FLANGE BOLT | 4 | | | | | 500 |
| 5060 | 073-20055-70 | LABEL(CAUTION) | 1 | | | | | 500 |
| 5110 | 073-20054-70 | LABEL(TRADE MARK) | 1 | | | | | 500 |
| 5120 | 013-00602-81 | BOLT AND WASHER AY | 4 | M6X14L RECOIL | | | | 500 |
| 5202 | 277-52711-21 | BAFFLE 1(CASE) CP | 1 | | | | | 500 |
| 5210 | 001-04061-60 | FLANGE BOLT | 1 | BAFFLE 1 | | | | 500 |
| 5302 | 277-52702-03 | BAFFLE 2(HEAD) | 1 | | | | | 500 |
| 5310 | 011-00600-20 | FLANGE BOLT | 1 | M6X1.0X12L DUCT | | | | 500 |
| 5402 | 277-55001-21 | DUCT (CASE) CP | 1 | GEN | | | | 500 |
| 5410 | 011-00600-20 | FLANGE BOLT | 3 | M6X1.0X12L DUCT | | | | 500 |
| 5500 | 277-50301-10 | RECOIL STARTER AY | 1 | D-STD | | | | 500 |
| 5502 | 226-50716-08 | SPIRAL SPRING | 1 | | | | | 500 |
| 5503 | 277-50121-08 | REEL | 1 | | | | | 500 |
| 5504 | 281-50325-08 | RATCHET | 1 | | | | | 500 |
| 5505 | 281-50330-08 | FRICTION SPRING | 1 | | | | | 500 |
| 5506 | 281-50351-08 | CENTER SCREW | 1 | | | | | 500 |
| 5507 | 281-50340-08 | FRICTION PLATE | 1 | | | | | 500 |
| 5508 | 277-50110-08 | STARTER ROPE | 1 | | | | | 500 |
| 5509 | 281-50300-08 | STARTER KNOB | 1 | | | | | 500 |
| 5510 | 277-50145-08 | STARTER PULLEY | 1 | | | | | 500 |

# FIG. 600

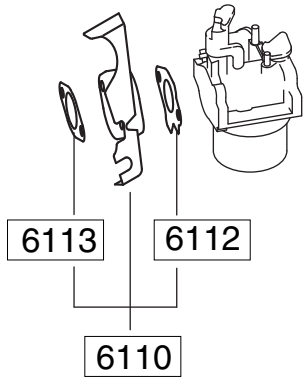
6113
6112
6110

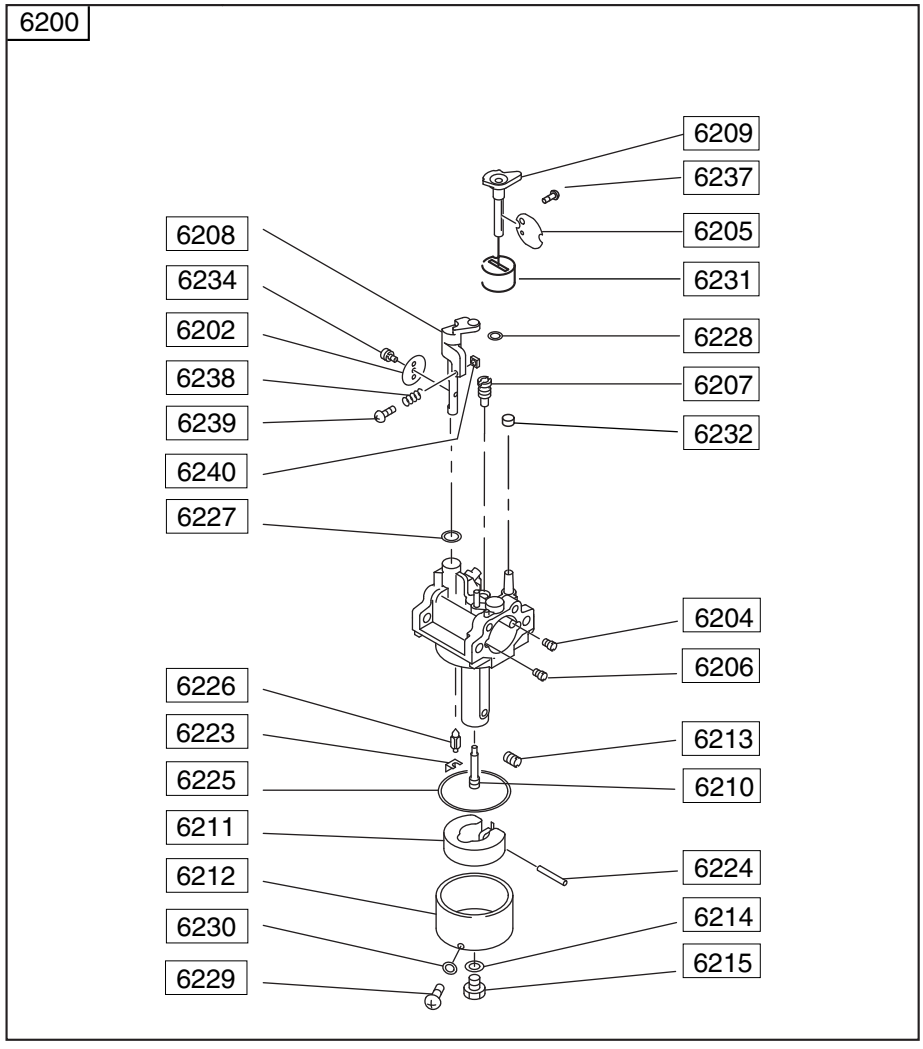
6200
6209
6237
6205
6231
6208
6234
6202
6238
6239
6240
6227
6228
6207
6232
6204
6206
6226
6223
6225
6211
6212
6230
6229
6213
6210
6224
6214
6215

## 6 FUEL LUBRICANT

| REF. | PART NUMBER | PART NAME | QTY | R E M A R K S | CODE NO. | INTERCHANGE P/NO. | UNIT P | FIG. |
|---|---|---|---|---|---|---|---|---|
| 6110 | 277-32902-J1 | INSULATOR CP | 1 | | | | | 600 |
| 6112 | 277-35902-J3 | GASKET1(INSULATOR) | 1 | T=0.5 | | | | 600 |
| 6113 | 277-35903-J3 | GASKET2(INSULATOR) | 1 | T=0.5 | | | | 600 |
| 6200 | 277-62304-40 | CARBURETOR AY | 1 | GEN | | | | 600 |
| 6202 | 277-62535-08 | THROTTLE VALVE | 1 | | | | | 600 |
| 6204 | 106-62410-08 | AIR JET(PILOT) | 1 | | | | | 600 |
| 6205 | 277-62527-08 | VALVE CHOKE | 1 | | | | | 600 |
| 6206 | 248-62410-08 | AIR JET | 1 | | | | | 600 |
| 6207 | 246-62420-08 | PILOT JET | 1 | | | | | 600 |
| 6208 | 277-62531-18 | THROTTLE SHAFT-A | 1 | | | | | 600 |
| 6209 | 277-62522-08 | CHOKE LEVER | 1 | | | | | 600 |
| 6210 | 277-62440-08 | MAIN NOZZLE | 1 | | | | | 600 |
| 6211 | 226-62506-08 | FLOAT | 1 | | | | | 600 |
| 6212 | 277-62506-08 | FLOAT BODY AY | 1 | | | | | 600 |
| 6213 | 277-62402-08 | MAIN JET | 1 | | | | | 600 |
| 6214 | 214-62450-08 | PACKING | 1 | | | | | 600 |
| 6215 | 227-62451-08 | BOLT | 1 | | | | | 600 |
| 6223 | 226-62701-18 | CLIP | 1 | | | | | 600 |
| 6224 | 277-62515-08 | PIN | 1 | | | | | 600 |
| 6225 | 214-62540-08 | CHAMBER PACKING | 1 | | | | | 600 |
| 6226 | 277-62500-08 | NEEDLE-A | 1 | | | | | 600 |
| 6227 | 246-62390-08 | SEAL | 1 | | | | | 600 |
| 6228 | 236-62680-08 | SEAL | 1 | | | | | 600 |
| 6229 | 277-62360-08 | BOLT | 1 | | | | | 600 |
| 6230 | 236-62541-08 | PACKING | 1 | | | | | 600 |
| 6231 | 277-62570-28 | RING | 1 | | | | | 600 |
| 6232 | 277-62571-08 | RING | 1 | | | | | 600 |
| 6234 | 209-62351-08 | SCREW | 1 | | | | | 600 |
| 6237 | 237-62451-08 | SCREW | 2 | | | | | 600 |
| 6238 | 283-62357-08 | SPRING | 1 | | | | | 600 |
| 6239 | 106-62556-08 | SCREW | 1 | | | | | 600 |
| 6240 | 277-62553-08 | NUT | 1 | | | | | 600 |

# FIG. 700

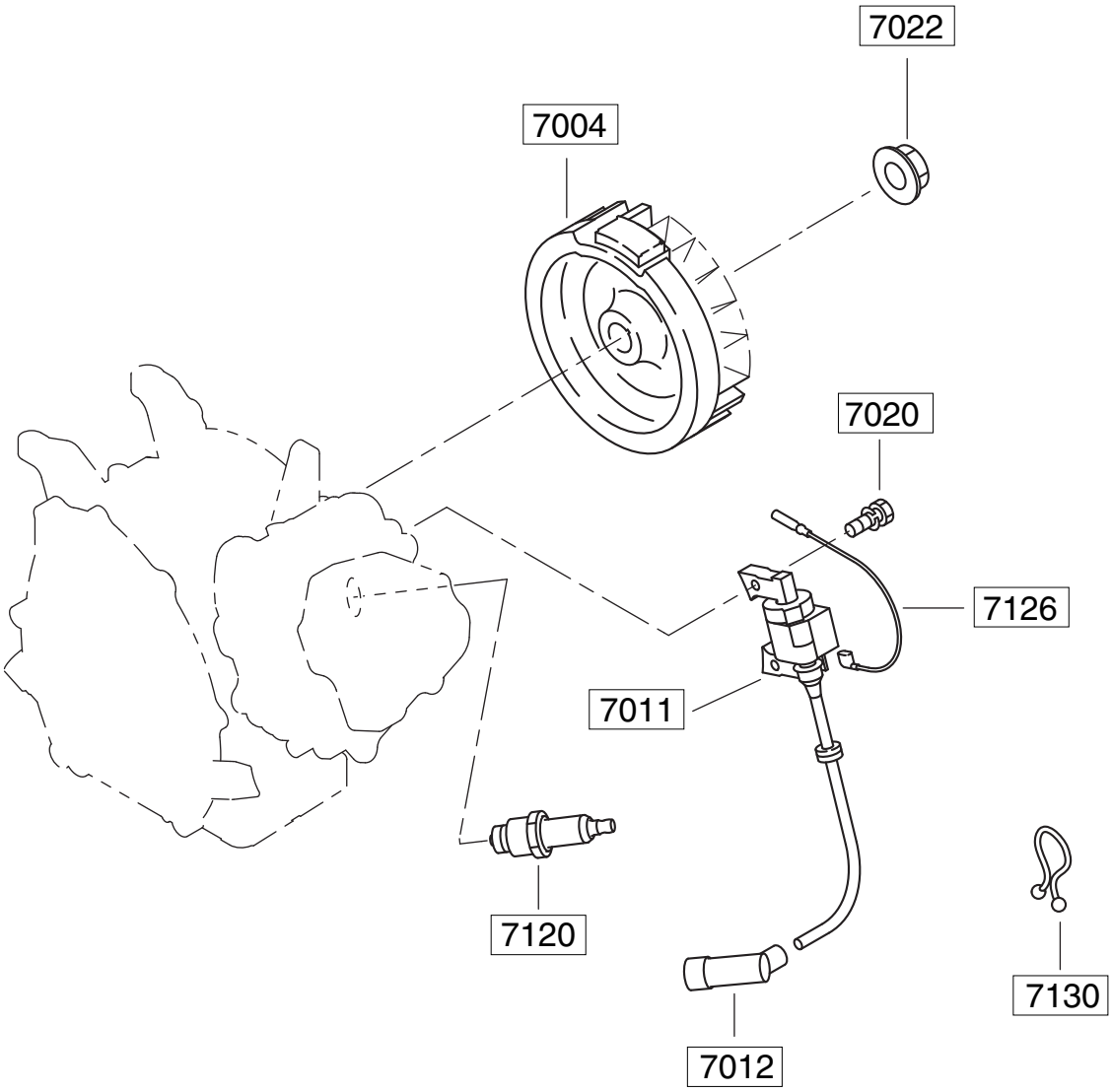
7022
7004
7020
7126
7011
7120
7130
7012

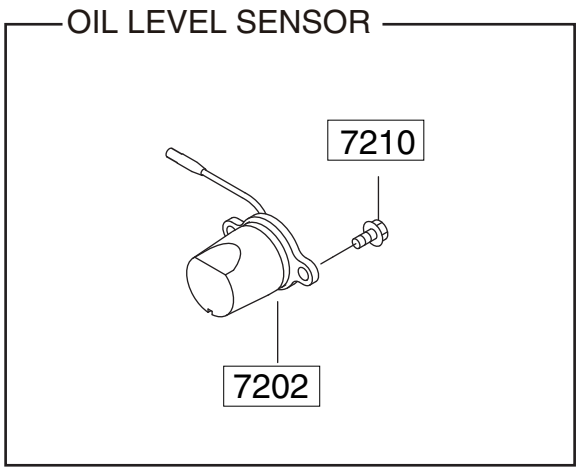
OIL LEVEL SENSOR
7210
7202

# 7 ELECTRIC DEVICE

| REF. | PART NUMBER | PART NAME | QTY | R E M A R K S | CODE NO. | INTERCHANGE P/NO. | UNIT P | FIG. |
|---|---|---|---|---|---|---|---|---|
| 7004 | 277-79230-11 | FLYWHEEL CP | 1 | D-STD | | | | 700 |
| 7011 | 277-79431-11 | IGNITION COIL CP | 1 | ID NO.BM3790 | | | | 700 |
| 7012 | 065-50002-70 | SPARK PLUG CAP | 1 | | | | | 700 |
| 7020 | 001-14062-50 | BOLT AND WASHER AY | 2 | | | | | 700 |
| 7022 | 018-01400-20 | FLANGE NUT | 1 | | | | | 700 |
| 7120 | 065-01401-50 | SPARK PLUG | 1 | 14DX12.7B BR6HS | | | | 700 |
| 7126 | 277-73102-H1 | WIRE 2 CP | 1 | OIL SENSOR | | | | 700 |
| 7130 | 056-90000-20 | PURSE LOCK | 1 | D=11.5 | | | | 700 |
| 7202 | 277-76301-21 | OIL SENSOR CP | 1 | | | | | 700 |
| 7210 | 001-14061-60 | BOLT AND WASHER AY | 2 | OIL SENSOR | | | | 700 |

# FIG. 2130

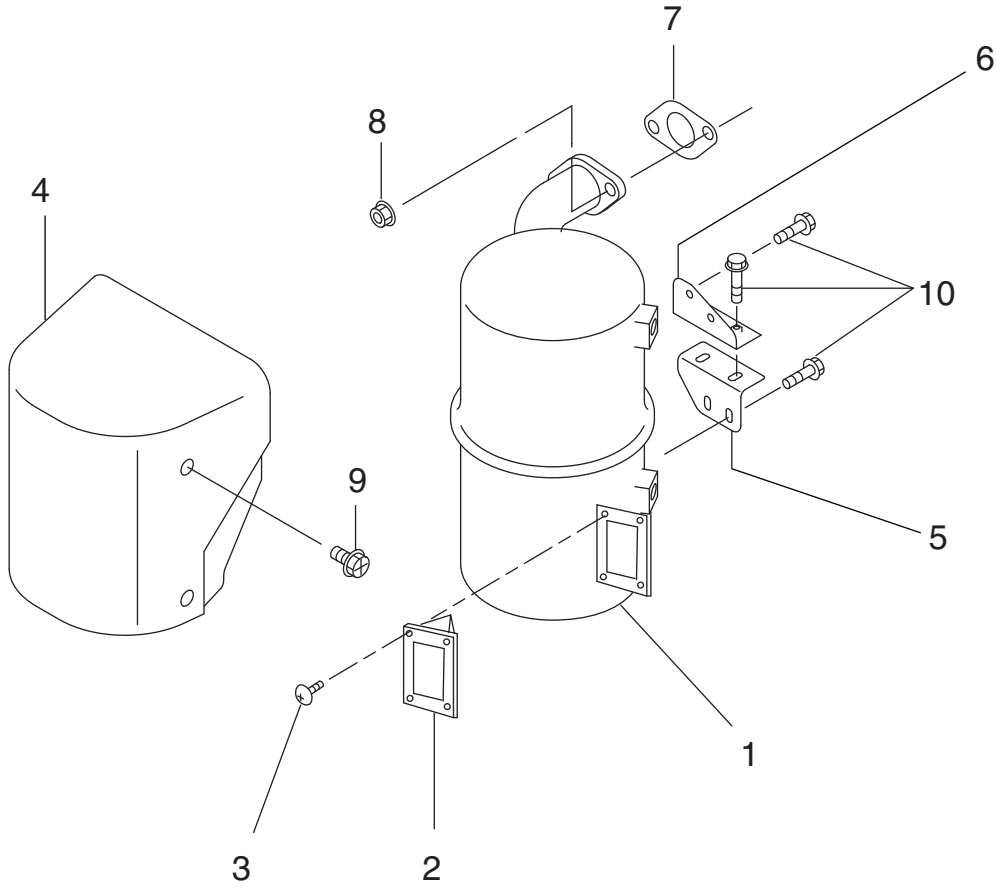


RGM30023000

## 21 ENGINE AY

| REF. | PART NUMBER | PART NAME | QTY | R E M A R K S | CODE NO. | INTERCHANGE P/NO. | UNIT P | FIG. |
|---|---|---|---|---|---|---|---|---|
| 1 | 277-30502-01 | MUFFLER CP | 1 | | | | | 2130 |
| 2 | 227-37602-11 | SPARK ARRESTER CP | 1 | | | | | 2130 |
| 3 | 015-00400-10 | TAPPING SCREW | 4 | | | | | 2130 |
| 4 | 277-34703-01 | MUFFLER COVER CP | 1 | | | | | 2130 |
| 5 | 277-39101-01 | MUFFLER BRACKET 1 CP | 1 | | | | | 2130 |
| 6 | 277-39102-01 | MUFFLER BRACKET 2 CP | 1 | | | | | 2130 |
| 7 | 277-35201-01 | GASKET CP(EXHAUST) | 1 | | | | | 2130 |
| 8 | 980-20082-80 | FLANGE NUT | 2 | | | | | 2130 |
| 9 | 011-00600-10 | FLANGE BOLT | 4 | | | | | 2130 |
| 10 | 001-14061-60 | BOLT AND WASHER AY | 6 | | | | | 2130 |

# FIG. 2200

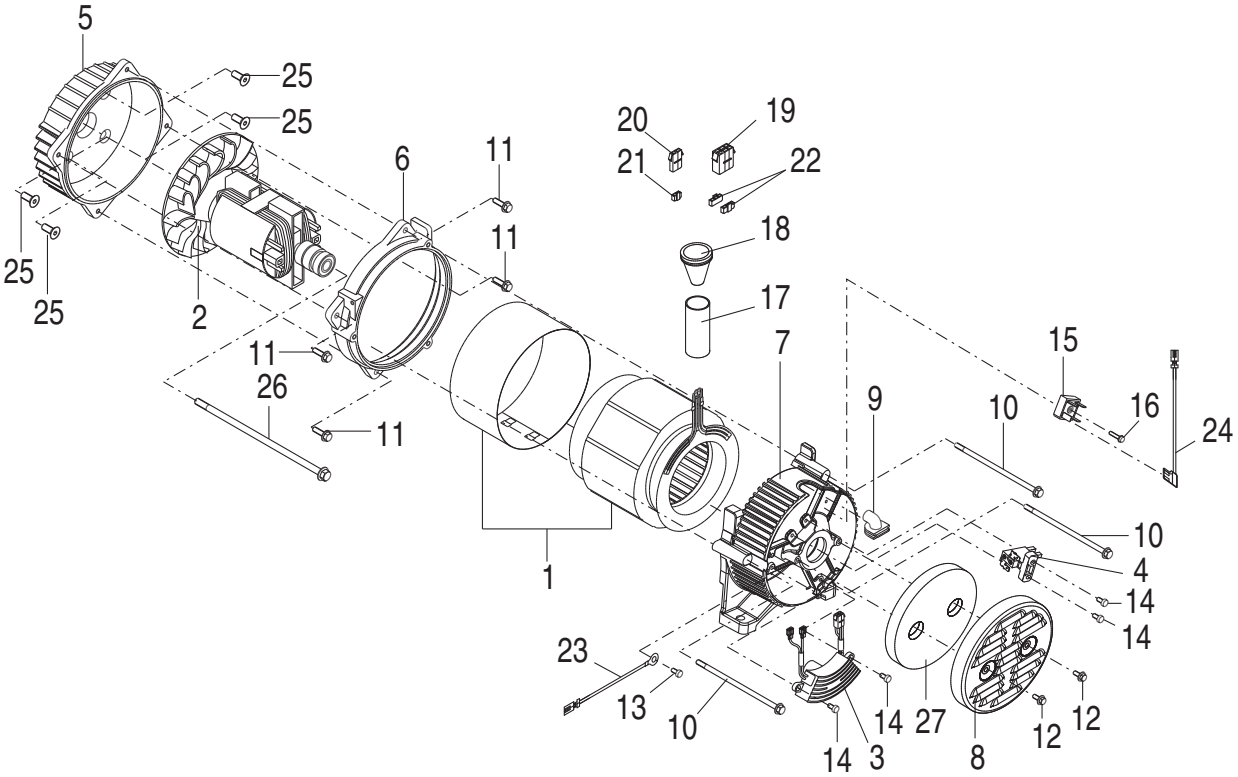


RGM30023000

## 22 GENERATOR AY

| REF. | PART NUMBER | PART NAME | QTY | R E M A R K S | CODE NO. | INTERCHANGE P/NO. | UNIT P | FIG. |
|---|---|---|---|---|---|---|---|---|
| 1 | 36A-20002-08 | STATOR CP | 1 | | | | | 2200 |
| 2 | 36A-20101-08 | ROTOR CP | 1 | | | | | 2200 |
| 3 | 36A-20202-08 | AVR CP | 1 | | | | | 2200 |
| 4 | 36A-20300-08 | BRUSH_CP | 1 | | | | | 2200 |
| 5 | 36A-22000-08 | GEN BRACKET 1 | 1 | | | | | 2200 |
| 6 | 36A-22100-08 | GEN BRACKET N | 1 | | | | | 2200 |
| 7 | 36A-22200-08 | GEN BRACKET 2 | 1 | | | | | 2200 |
| 8 | 36A-23000-08 | BRACKET COVER | 1 | | | | | 2200 |
| 9 | 36A-25000-08 | BUSHING | 1 | | | | | 2200 |
| 10 | 36A-21000-08 | STATOR BOLT | 3 | | | | | 2200 |
| 11 | 36A-80000-08 | FLANGE BOLT | 4 | | | | | 2200 |
| 12 | 36A-80001-08 | FLANGE BOLT | 2 | | | | | 2200 |
| 13 | 36A-80100-08 | SCREW & WASHER AY | 1 | | | | | 2200 |
| 14 | 36A-80002-08 | FLANGE BOLT | 4 | | | | | 2200 |
| 15 | 36A-25001-08 | DIODE CP | 1 | | | | | 2200 |
| 16 | 36A-80101-08 | SCREW & WASHER AY | 1 | | | | | 2200 |
| 17 | 36A-25002-08 | TUBE | 1 | | | | | 2200 |
| 18 | 36A-25003-08 | GROMMET | 1 | | | | | 2200 |
| 19 | 36A-70000-08 | CONNECTOR(6P) | 1 | | | | | 2200 |
| 20 | 36A-70002-08 | CONNECTOR(2P) | 1 | | | | | 2200 |
| 21 | 36A-70101-08 | RETAINER(2P) | 1 | | | | | 2200 |
| 22 | 36A-70100-08 | RETAINER(3P) | 2 | | | | | 2200 |
| 23 | 36A-71000-08 | WIRE(GREEN) | 1 | | | | | 2200 |
| 24 | 36A-71001-08 | WIRE(WHITE) | 1 | | | | | 2200 |
| 25 | 36A-80200-08 | SCREW | 4 | | | | | 2200 |
| 26 | 36A-21100-08 | ROTOR BOLT | 1 | | | | | 2200 |
| 27 | 36A-25004-08 | SPONGE(FILTER) | 1 | | | | | 2200 |

# FIG. 2300

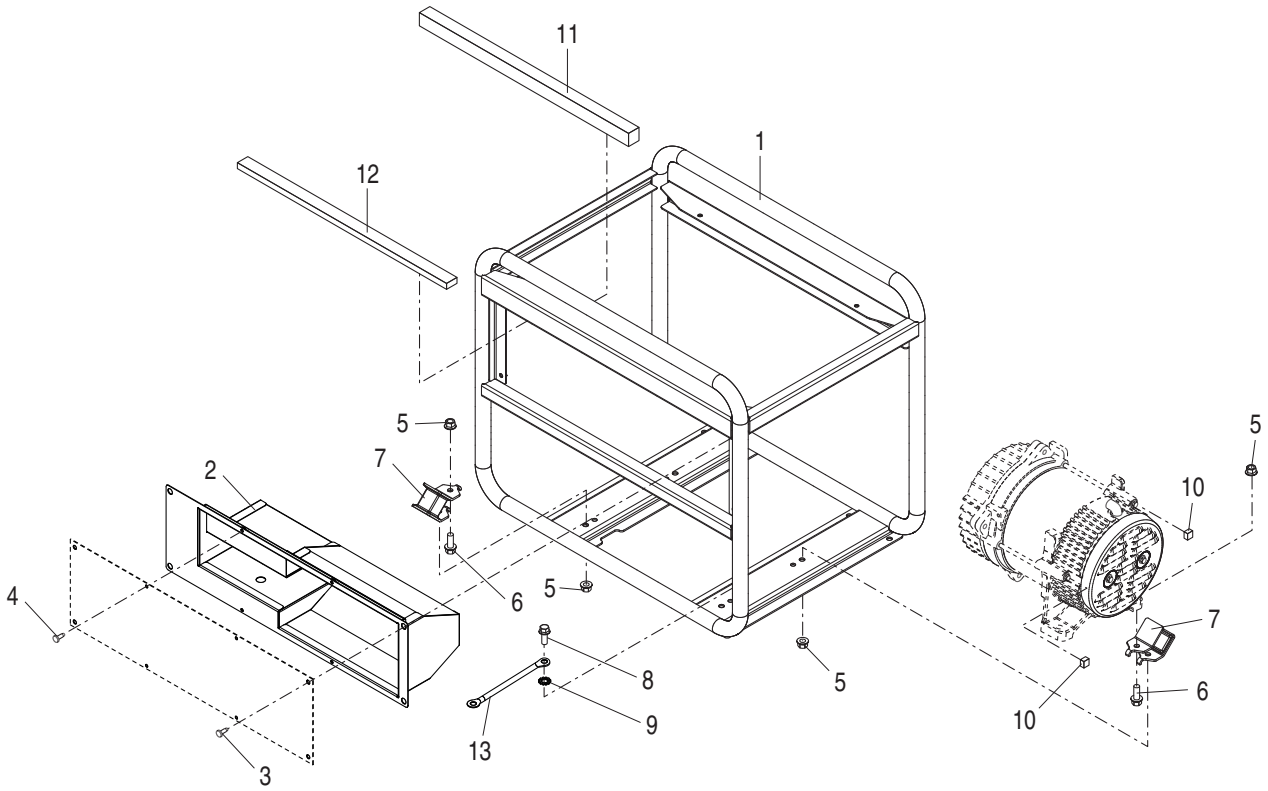


RGM30023000

## 23 BASE,FRAME

| REF. | PART NUMBER | PART NAME | QTY | R E M A R K S | CODE NO. | INTERCHANGE P/NO. | UNIT P | FIG. |
|---|---|---|---|---|---|---|---|---|
| 1 | 36A-30000-08 | PIPE FRAME CP | 1 | | | | | 2300 |
| 2 | 36A-40001-08 | CONTROL BOX CP | 1 | | | | | 2300 |
| 3 | 36A-80104-08 | SCREW & WASHER AY | 4 | | | | | 2300 |
| 4 | 36A-80105-08 | SCREW & WASHER AY | 4 | | | | | 2300 |
| 5 | 36A-81002-08 | FLANGE NUT | 8 | | | | | 2300 |
| 6 | 36A-80003-08 | FLANGE BOLT | 4 | | | | | 2300 |
| 7 | 36A-31000-08 | MOUNT CP | 4 | | | | | 2300 |
| 8 | 36A-80004-08 | FLANGE BOLT | 1 | | | | | 2300 |
| 9 | 36A-82001-08 | LOCK WASHER | 1 | | | | | 2300 |
| 10 | 36A-25005-08 | SPONGE(GEN) | 2 | | | | | 2300 |
| 11 | 36A-35000-08 | SPONGE(TANK) | 1 | | | | | 2300 |
| 12 | 36A-35001-08 | SPONGE(PANEL) | 1 | | | | | 2300 |
| 13 | 36A-71007-08 | WIRE(GREEN/YELLOW) | 1 | | | | | 2300 |

# FIG. 2400

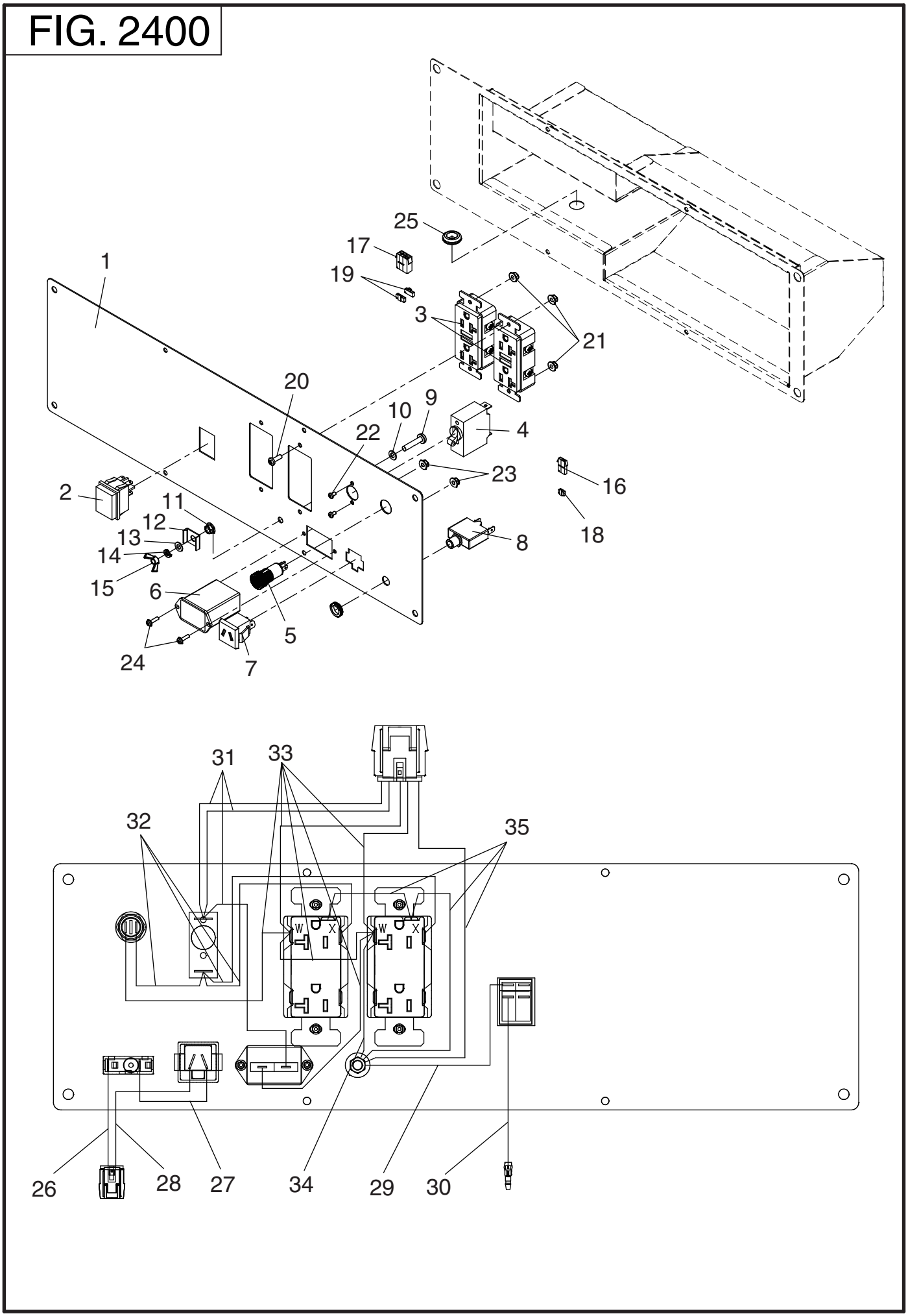


RGM30023000

## 24 CONTROL

| REF. | PART NUMBER | PART NAME | QTY | R E M A R K S | CODE NO. | INTERCHANGE P/NO. | UNIT P | FIG. |
|---|---|---|---|---|---|---|---|---|
| 1 | 36A-41002-08 | CONTROL PANEL CP | 1 | | | | | 2400 |
| 2 | 36A-49000-08 | SWITCH(ENGINE) | 1 | | | | | 2400 |
| 3 | 36A-47002-08 | AC CONCENT(GFCI) | 2 | | | | | 2400 |
| 4 | 36A-48002-08 | CIRCUIT BREAKER(10A) | 1 | | | | | 2400 |
| 5 | 36A-49003-08 | PILOT LAMP | 1 | | | | | 2400 |
| 6 | 36A-49002-08 | HOUR METER | 1 | | | | | 2400 |
| 7 | 36A-47101-08 | DC CONCENT | 1 | | | | | 2400 |
| 8 | 36A-48001-08 | CIRCUIT BREAKER(10A) | 1 | | | | | 2400 |
| 9 | 36A-80102-08 | SCREW & WASHER AY | 1 | | | | | 2400 |
| 10 | 36A-82000-08 | LOCK WASHER | 1 | | | | | 2400 |
| 11 | 36A-81000-08 | FLANGE NUT | 1 | | | | | 2400 |
| 12 | 36A-82100-08 | CAP WASHER | 1 | | | | | 2400 |
| 13 | 36A-82200-08 | WASHER | 1 | | | | | 2400 |
| 14 | 36A-82300-08 | SPRING WASHER | 1 | | | | | 2400 |
| 15 | 36A-81100-08 | WING NUT | 1 | | | | | 2400 |
| 16 | 36A-70003-08 | CONNECTOR(2P) | 1 | | | | | 2400 |
| 17 | 36A-70001-08 | CONNECTOR(6P) | 1 | | | | | 2400 |
| 18 | 36A-70101-08 | RETAINER(2P) | 1 | | | | | 2400 |
| 19 | 36A-70100-08 | RETAINER(3P) | 2 | | | | | 2400 |
| 20 | 36A-80202-08 | SCREW | 4 | | | | | 2400 |
| 21 | 36A-81001-08 | FLANGE NUT | 4 | | | | | 2400 |
| 22 | 36A-80103-08 | SCREW & WASHER AY | 2 | | | | | 2400 |
| 23 | 36A-81005-08 | FLANGE NUT | 2 | | | | | 2400 |
| 24 | 36A-80203-08 | SCREW | 2 | | | | | 2400 |
| 25 | 36A-49900-08 | GROMMET | 1 | | | | | 2400 |
| 26 | 36A-71002-08 | WIRE(WHITE) | 1 | | | | | 2400 |
| 27 | 36A-71003-08 | WIRE(WHITE) | 1 | | | | | 2400 |
| 28 | 36A-71004-08 | WIRE(BLACK) | 1 | | | | | 2400 |
| 29 | 36A-71005-08 | WIRE(GREEN) | 1 | | | | | 2400 |
| 30 | 36A-71006-08 | WIRE(BLACK) | 1 | | | | | 2400 |
| 31 | 36A-71020-08 | WIRE(RED) | 1 | | | | | 2400 |
| 32 | 36A-71021-08 | WIRE(RED) | 1 | | | | | 2400 |
| 33 | 36A-71022-08 | WIRE(BLUE) | 1 | | | | | 2400 |
| 34 | 36A-71023-08 | WIRE(BLUE) | 1 | | | | | 2400 |
| 35 | 36A-71024-08 | WIRE(GREEN) | 1 | | | | | 2400 |

# FIG. 2600

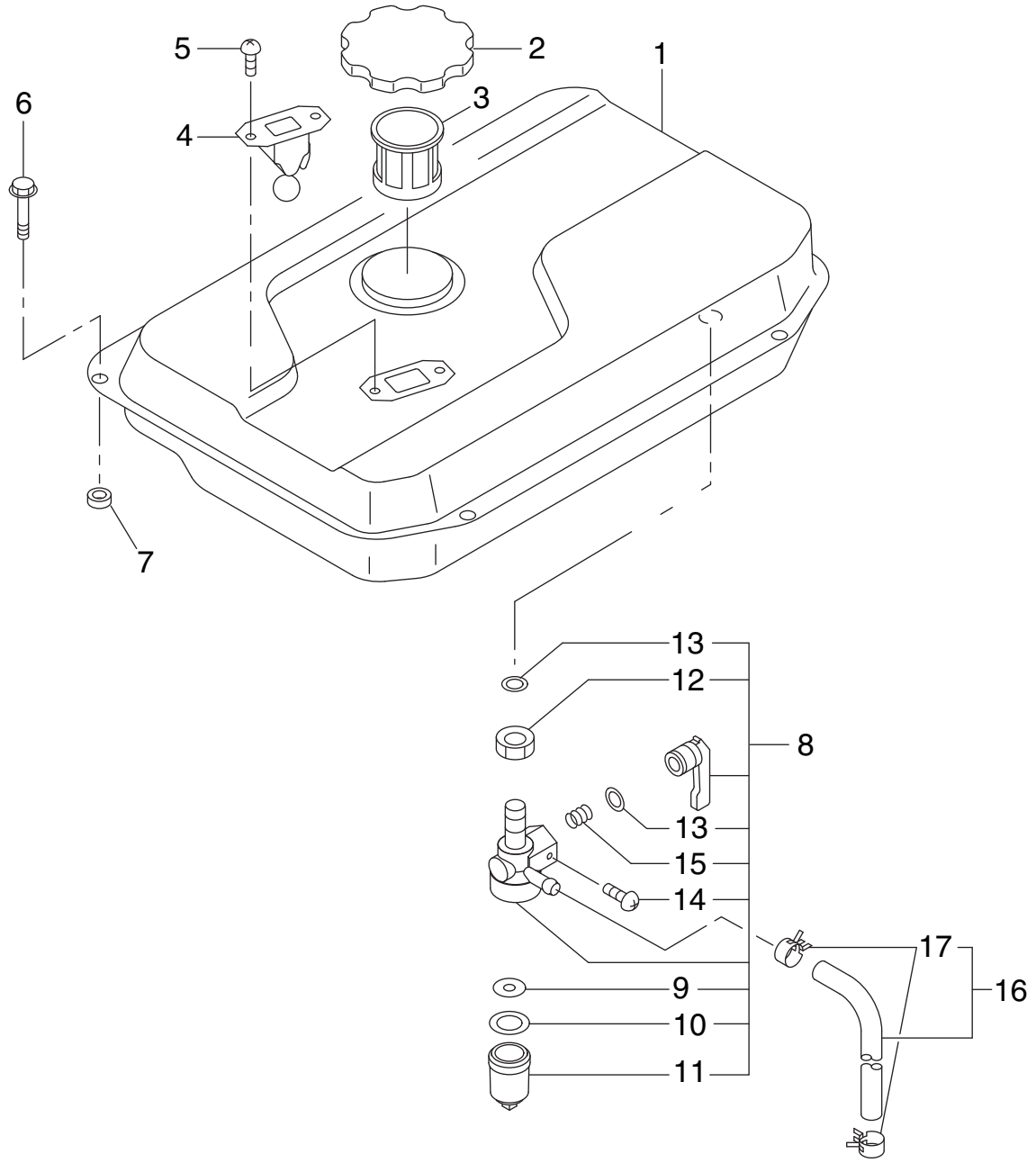


RGM30023000

# 26 FUEL TANK

| REF. | PART NUMBER | PART NAME | QTY | R E M A R K S | CODE NO. | INTERCHANGE P/NO. | UNIT P | FIG. |
|---|---|---|---|---|---|---|---|---|
| 1 | 270-61718-01 | FUEL TANK CP | 1 | | | | | 2600 |
| 2 | 043-05900-11 | FUEL TANK CAP AY | 1 | | | | | 2600 |
| 3 | 064-15400-11 | FUEL FILTER | 1 | | | | | 2600 |
| 4 | 064-80018-00 | FUEL GAUGE CP | 1 | | | | | 2600 |
| 5 | 014-50500-40 | SCREW (COUNTER HEAD) | 2 | | | | | 2600 |
| 6 | 011-00602-20 | FLANGE BOLT(TANK) | 4 | | | | | 2600 |
| 7 | 391-39000-13 | RUBBER(TANK) | 4 | | | | | 2600 |
| 8 | 064-20100-01 | FUEL STRAINER AY | 1 | | | | | 2600 |
| 9 | 064-20041-10 | FILTER | 1 | | | | | 2600 |
| 10 | 064-20014-30 | RUBBER PACKING | 1 | | | | | 2600 |
| 11 | 064-20014-10 | CUP | 1 | | | | | 2600 |
| 12 | 064-20100-30 | LOCK NUT | 1 | | | | | 2600 |
| 13 | 064-20003-30 | O-RING | 2 | | | | | 2600 |
| 14 | 064-20027-90 | BOLT | 1 | | | | | 2600 |
| 15 | 064-20032-30 | SPRING | 1 | | | | | 2600 |
| 16 | 269-62613-01 | FUEL PIPE 3 CP(EVP) | 1 | | | | | 2600 |
| 17 | 056-11100-20 | HOSE CLAMP | 2 | | | | | 2600 |

# FIG. 2900

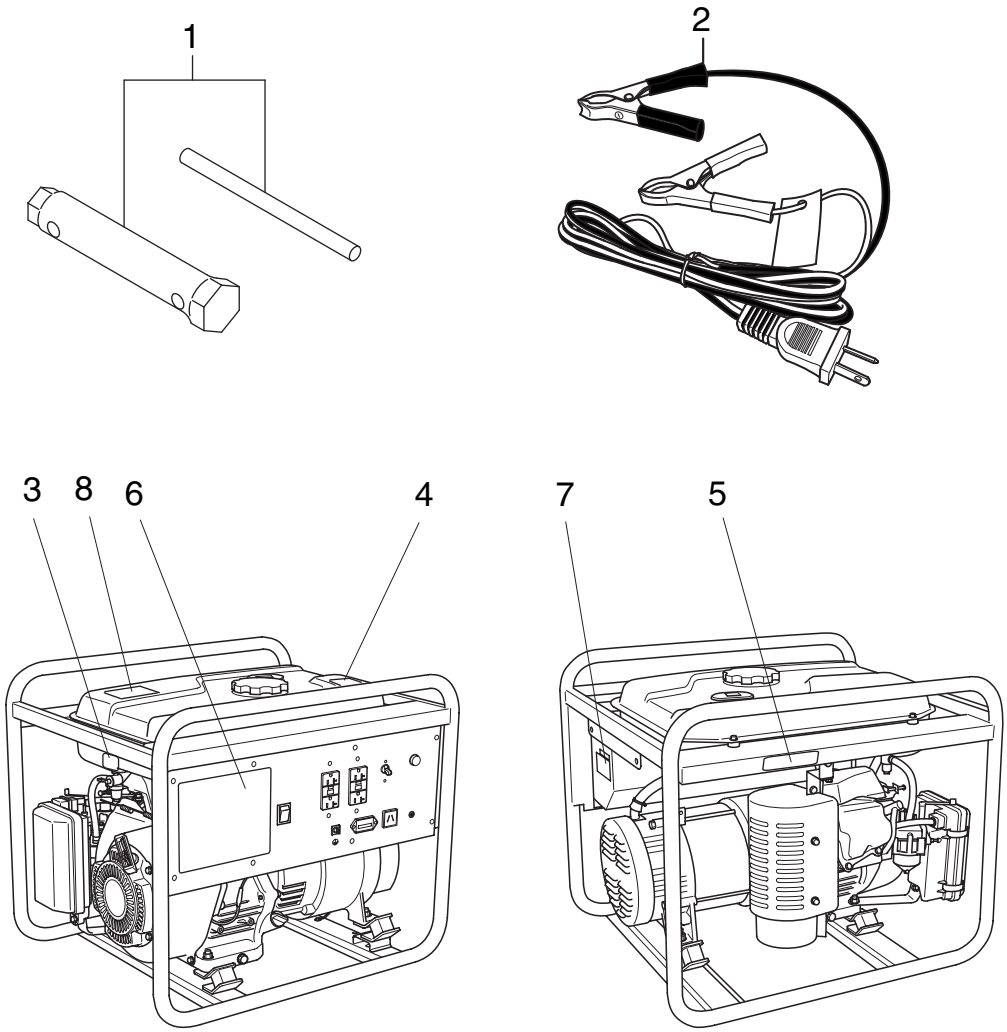


RGM30023000

## 29 ACCESSORIES

| REF. | PART NUMBER | PART NAME | QTY | R E M A R K S | CODE NO. | INTERCHANGE P/NO. | UNIT P | FIG. |
|---|---|---|---|---|---|---|---|---|
| 1 | 277-90301-H0 | ACCESSORY TOOL KIT | 1 | | | | | 2900 |
| 2 | 36A-79000-08 | BATTERY CABLE | 1 | | | | | 2900 |
| 3 | 36A-98001-08 | LABEL(FUEL_COCK) | 1 | | | | | 2900 |
| 4 | 36A-98002-08 | LABEL(SYMBOL-TANK) | 1 | | | | | 2900 |
| 5 | 36A-98003-08 | LABEL(HOT & GAS) | 1 | | | | | 2900 |
| 6 | 36A-90003-08 | LABEL(TRADE MARK) | 1 | | | | | 2900 |
| 7 | 36A-91003-08 | LABEL(SPEC) | 1 | | | | | 2900 |
| 8 | 36A-98005-08 | LABEL(CO GAS) | 1 | | | | | 2900 |